Reciprocating Saw

INSTRUCTION MANUAL

For your personal safety, READ and UNDERSTAND before using.

SAVE THESE INSTRUCTIONS FOR FUTURE REFERENCE.

Warning:
Tools equipped with over load protection, when motor has been cut off due to over load, always switch on machine with no load for at least 20 seconds to reduce temperature before switch on again to avoid burn out to the motor.

Version:20130628

Technical data

Voltage	See machine nameplate
No load speed min^{-1}	1000-2800
Power input	110-120V = 1300W, 220-240V = 1600W
Stroke	26mm (1")
Insulation Double insulation	Class II
Weight	3.70 Kgs (8.14 Lbs)

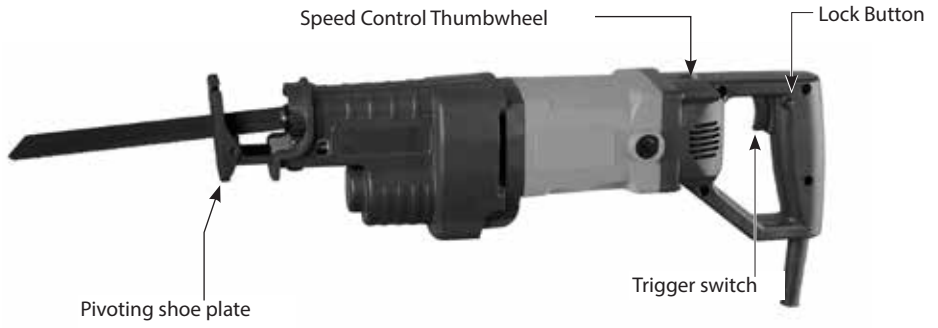

GENERAL SAFETY INSTRUCTIONS

WARNING! Read all safety warnings and all instructions. Failure to follow the warnings and instructions may result in electric shock, fire and/or serious injury.

Save all warnings and instructions for future reference. The term "power tool" in the warnings refers to your mainsoperated (corded) power tool or battery-operated (cordless) power tool.

1) WORK AREA SAFETY

a. **Keep work area clean and well lit.** Cluttered or dark areas invite accidents.

b. **Do not operate power tools in explosive atmospheres, such as in the presence of flammable liquids, gases or dust.** Power tools create sparks which may ignite the dust or fumes.

c. **Keep children and bystanders away while operating a power tool.** Distractions can cause you to lose control.

2) ELECTRICAL SAFETY

a. **Power tool plugs must match the outlet. Never modify the plug in any way. Do not use any adapter plugs with earthed (grounded) power tools.**
Unmodified plugs and matching outlets will reduce risk of electric shock.

b. **Avoid body contact with earthed or grounded surfaces such as pipes, radiators, ranges and refrigerators.** There is an increased risk of electric shock if your body is earthed or grounded.

c. **Do not expose power tools to rain or wet conditions.** Water entering a power tool will increase the risk of electric shock.

d. **Do not abuse the cord. Never use the cord for carrying, pulling or unplugging the power tool. Keep cord away from heat, oil, sharp edges or moving parts.** Damaged or entangled cords increase the risk of electric shock.

e. **When operating a power tool outdoors, use an extension cord suitable for outdoor use**. Use of a cord suitable for outdoor use reduces the risk of electric shock.

f. **If operating a power tool in a damp location is unavoidable, use an earth leakage circuit breaker.** Use of an earth leakage circuit breaker reduces the risk of electric shock.

3) PERSONAL SAFETY

a. **a) Stay alert, watch what you are doing and use common sense when operating a power tool. Do not use a power tool while you are tired or under the influence of drugs, alcohol or medication**. A moment of inattention while operating power tools may result in serious personal injury.

b. **b) Use personal protective equipment. Always wear eye protection.** Protective equipment such as dust mask, non-skid safety shoes, hard hat, or hearing protection used for appropriate conditions will reduce personal injuries.

c. **Prevent unintentional starting. Ensure the switch is in the off-position before connecting to power source and/or battery pack, picking up or carrying the tool.** Carrying power tools with your finger on the switch or energising power tools that have the switch on invites accidents.

d. **Remove any adjusting key or wrench before turning the power tool on.** A wrench or a key left attached to a rotating part of the power tool may result in personal injury.

e. **Do not overreach. Keep proper footing and balance at all times.** This enables better control of the power tool in unexpected situations.

f. **Dress properly. Do not wear loose clothing or jewelry. Keep your hair, clothing and gloves away from moving parts.** Loose clothes, jewelry or long hair can be caught in moving parts.

g. **If devices are provided for the connection of dust extraction and collection facilities,**

ensure these are connected and properly used. Use of dust collection can reduce dust-related hazards.

4) POWER TOOL USE AND CARE

a. **Do not force the power tool. Use the correct power tool for your application.** The correct power tool will do the job better and safer at the rate for which it was designed.

b. **Do not use the power tool if the switch does not turn it on and off.** Any power tool that cannot be controlled with the switch is dangerous and must be repaired.

c. **Disconnect the plug from the power source and/or the battery pack from the power tool before making any adjustments, changing accessories, or storing power tools.** Such preventive safety measures reduce the risk of starting the power tool accidentally.

d. **Store idle power tools out of the reach of children and do not allow persons unfamiliar with the power tool or these instructions to operate the power tool.** Power tools are dangerous in the hands of untrained users.

e. **Maintain power tools. Check for misalignment or binding of moving parts, breakage of parts and any other condition that may affect the power tool's operation. If damaged, have the power tool repaired before use.** Many accidents are caused by poorly maintained power tools.

f. **Keep cutting tools sharp and clean.** Properly maintained cutting tools with sharp cutting edges are less likely to bind and are easier to control.

g. **Use the power tool, accessories and tool bits etc., in accordance with these instructions, taking into account the working conditions and the work to be performed.** Use of the power tool for operations different from those intended could result in a hazardous situation.

5) SERVICE

Have your power tool serviced by a qualified repair person using only identical replacement parts. This will ensure that the safety of the power tool is maintained.

Symbols used in this manual

V…….....volts

A…….....amperes

Hz…….....hertz

W…….....watt

~……....alternating current

n_o……..no load speed

min^{-1}….....revolutions or reciprocation per minute

.....warning of general danger

…..class II tool

….with electrical earth

.....read these instructions

.....always wear eye protection

.....always wear a dust mask.

.....always wear hearing protection

.....wear safety-approved hard hat

.....Keep hands clear – pinching hazard.

DANGER! Keep hands away from cutting area and the blade.

rotating parts - entanglement hazard. Keep hands, loose clothing and long hair away from moving parts

do not dispose of electric tools, accessories and packaging together with household waste material

SPECIFIC SAFETY RULES

Some dust created by power sanding, sawing, grinding, drilling, and other construction activities contains chemicals known to cause cancer, birth defects or other reproductive harm. Some examples of these chemicals are:

- lead from lead-based paints
- crystalline silica from bricks and cement and other masonry products
- arsenic and chromium from chemically-treated lumber

Your risk from these exposures varies, depending on how often you do this type of work. To reduce your exposure to these chemicals: work in a well ventilated area, and work with approved safety equipment, always wear NIOSH/OSHA approved, properly fitting face mask or respirator when using such tools.

1. **Hold power tool by insulated gripping surfaces when performing an operation where the cutting tool may contact hidden wiring or its own cord.** Contact with a "live" wire will make exposed metal parts of the tool "live" and shock the operator.
2. **Use clamps or other practical way to secure and support the workpiece to a stable platform.** Holding the work by hand or against your body is unstable and may lead to loss of control.
3. **Only use sharp saw blades.** Sharp blades will do the job better and safer. Replace blade immediately if dull or damaged.
4. **Keep hands away from cutting area.** When sawing never reach underneath or behind the material being cut for any reason.
5. **When you have finished a cut be careful not to come into contact with the blade.** Turn off the motor immediately.
6. **Exercise extreme caution when blind cutting.** Be certain that there are no foreign objects such as electrical wire, conduit, plumbing pipes, etc., that may come into contact with the blade.
7. **Wear eye and hearing protection. Always use safety glasses.** Everyday eyeglasses are NOT safety glasses. USE CERTIFIED SAFETY EQUIPMENT. Eye protection equipment should comply with ANSI Z87.1 standards. Hearing equipment should comply with ANSI S3.19 standards.
8. **Use of this tool can generate and disburse dust or other airborne particles, including wood dust, crystalline silica dust and asbestos dust.** Direct particles away from face and body. Always operate tool in well ventilated area and provide for proper dust removal.Use dust collection system wherever possible. Exposure to the dust may cause serious and permanent respiratory or other injury, including silicosis (a serious lung disease), cancer, and death. Avoid breathing the dust, and avoid prolonged contact with dust. Allowing dust to get into your mouth or eyes, or lay on your skin may promote absorption of harmful material. Always use properly fitting NIOSH/OSHA approved respiratory protection appropriate for the dust exposure, and wash exposed areas with soap and water.

Terminology:

DANGER: indicates an imminently hazardous situation which, if not avoided, will result in death or serious injury.

WARNING: indicates a potentially hazardous situation which, if not avoided, could result in death or serious injury.

CAUTION: indicates a potentially hazardous situation which, if not Avoided, may result in minor or moderate injury. or indicates potentially hazardous situation which, if not avoided, may result in property damage.

NOTE: indicates useful advice for operating the

machine for best performance or convenience, etc.

MOTOR

Always check the nameplate to ensure the A.C. current supply is the correct voltage for your machine.
This tool will operate on voltage within plus or minus 5 percent of that shown on the specification plate on the tool. Refer to the specification plate on your tool for proper voltage and current rating.
Do not operate your tool on a current on which the voltage is not within correct limits.
If an extension cord is used, make sure the conductor size is large enough to prevent excessive voltage drop which will cause loss of power and possible motor damage.
If an extension cord is to be used outdoors, it must be marked with the suffix WA or W following the cord type designation. For example – SJTW-A to indicate it is acceptable for outdoor use. Always choose the shortest possible cord.

EXTENSION CORD SELECTION

Total Extension Cord Length (feet)	Cord Size (AWG)
25	16
50	12
100	10
150	8
200	6

RECIPROCATING SAW

* Storage case
* Blade
* hex wrench

FOREWORD

This Reciprocating Saw is designed for cutting metal up to 20mm (3/4") thick, wood up to 300mm (12") thick (depending on the blade), and various other materials, such as plastics, fiberglass, hard rubber, etc.

SELECTING THE BLADE

For best performance, longer blade life, and smoother cut, select the proper blade for the job.
When cutting metal always select a blade which will allow at least three teeth to be engaged in the thickness of material.

MOUNTING THE BLADE

WARNING: Make sure to unplug the power cord when mounting or removing the blade.

Warning: Be absolutely sure to hold the flat top of the blade, instead of the teeth, to prevent any accident.

The machine is designed that the blade could be mounted or removed without a wrench or any other tools.

1. Press the switch and the shaft will move forward. Then turn off the switch and unplug the power cord.
2. Please turn the quick-release collar as shown .
3. Turn the quick-release collar to insert the blade into the small slot of the shaft. The blade could be mounted either in the upward or downward direction. When you release the quick-release collar, the spring will return automatically.
4. Pull the blade forth and back for several times by hand to ensure the blade clicks.

5. Sometimes you need to turn the quick-release collar as shown to ensure the blade is mounted appropriately when there is dust or dirt accumulated on the quick-release collar.

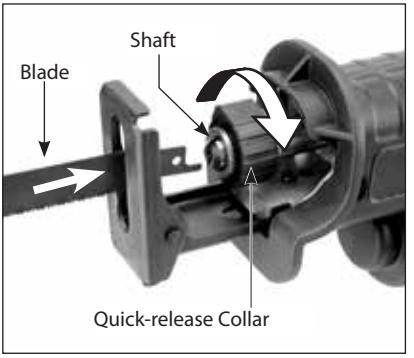

Removing the blade

WARNING: Make sure to unplug the power cord when mounting or removing the blade.

1. Press the switch and the shaft will move forward. Then turn off the switch and unplug the power cord.
2. Turn the quick-release collar as shown .

WARNING: Never touch the blade with bare hands after cutting. The blade is often very hot after cutting and may result in personal injury.

WARNING: Never use the saw if the fixing slot of the tip of the blade is damaged.

When the blade is broken If the blade is broken and remains in the shaft, turn the quick-release collar and the broken part will fall out. If not, use a tip of another blade to take it out.
Use compressed air to clean the accumulated chips on the quick-release collar.
Lubricate the quick-release collar regularly to prevent from rusting.

WARNING: NEVER TOUCH BLADE IMMEDIATELY AFTER USE, AS IT MAY BE HOT ENOUGH TO CAUSE SEVERE BURNS.

TO PREVENT ACCIDENTAL ELECTRICAL SHOCK THE SAW MUST BE HELD WITH ONE HAND ON THE MAIN HANDLE AND THE OTHER HAND ON THE RUBBER GEARCASE COVER. THE RUBBER GEARCASE COVER MUST BE FREE OF DAMAGE AND PROPERLY INSTALLED AT ALL TIMES.

Adjusting the shoe plate

If some of the teeth of the saw balde is worn out, use a hex wrench to adjust the position of the shoe plate. Tighten the screw after the adjustment.

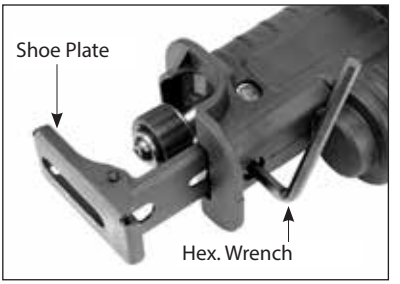

TO START AND STOP SAW

1. Make sure power circuit voltage is the same as shown on the specification plate on the saw. Connect saw to power circuit.
2. Hold saw firmly. Squeeze trigger switch to start motor.
3. Release trigger to stop motor.
4. To lock the switch in the on position, press the lock button while the switch is fully on. To

release the lock, press the switch and release it.

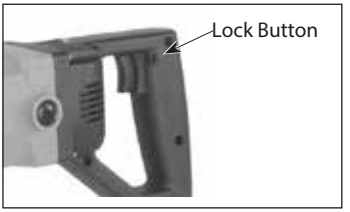

VARIABLE SPEED

This saw is equipped with a variable speed control thumbwheel (500 to 1400 SPM). As the Thumbwheel is turned to the right, the speed of the saw blade will increase. The motor is equipped with electronic feedback circuitry to stabilize cutting speed, so no matter the load, the motor will maintain the set cutting speed.
Lower speeds are recommended for most metal cutting and higher speeds are recommended for wood. A few practice cuts at various speeds on scrap materials will allow you find the ideal speed for each application.
The motor has soft-start function so that it starts up slowly and builds up to full speed after a few seconds. This allows the operator to rest the blade on the intended line of cut before starting. This will avoid the wobbling blade from biting into the material at the wrong place.**ORBITAL BLADE MOTION**

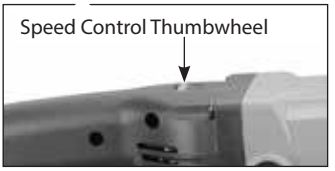

This saw features orbital cutting motion.
The orbital motion allows the blade to do its work most effectively. Since the blade teeth point backward, the machine only cuts on the backstroke. While the blade is making the forward stroke it should only lightly slide across. The orbital motion helps the blade to do this. Therefore, excessive downforce will defeat this function. Allow the tool to do the cutting. Excessive downforce will not speed cutting, it will only cause premature blade wear, lost teeth, narrowing kerf, and blade overheating.

SOFT START FUNCTION

The motor has soft-start function so that it starts up slowly and builds up to full speed after a few seconds. This allows the operator to rest the blade on the intended line of cut before starting. This will avoid the wobbling blade from biting into the material at the wrong place. Do not start the machine away from the workpiece or the soft start function will not be of benefit. Always start with the blade in contact with the workpiece.

ORBITAL BLADE MOTION

This saw features orbital cutting motion.
The orbital motion allows the blade to do its work most effectively. Since the blade teeth point backward, the machine only cuts on the backstroke. While the blade is making the forward stroke it should only lightly slide across. The orbital motion helps the blade to do this. Therefore, excessive downforce will defeat this function. Allow the tool to do the cutting. Excessive downforce will not speed cutting, it will only cause premature blade wear, lost teeth, narrowing kerf, and blade overheating.

CAUTION: Never run this machine with the blade not in contact with a workpiece. The Orbital Blade Motion will quickly cause the blade to snap off.

BEFORE YOU START TO WORK

Select the blade best suited for the material to be cut. For greatest economy, use the shortest blade suitable for the thickness of the material to be cut.
Be sure the material to be cut is rigid. Small work pieces should be securely clamped in a bench vise or with clamps to the work table. As the work progresses in scroll or curved cut-out pieces, the material may be readjusted to accommodate the movement of the saw. The saw cuts freely with only slight feed pressure. Forcing the saw will not make it cut faster.

OPERATION

Since the blade (especially long blades) will wobble side-to-side while running free from the workpiece, this makes it very difficult to accurately control the blade's entry point. Therefore, the technique is to lightly contact the workpiece with the blade before starting the machine. The motor's soft start function will make this more controllable. Do not use full feed pressure until the cut is fully established.

SAWING WOOD

Remember that because the blade cuts on the up-stroke (pull) instead of the down-stroke (push) as in the case of the hand saw, the good or finish side of the work should face down (away from the machine) during cutting.

PLUNGE CUTS

Caution: Do not plunge cut metal materials.

This machine can be used for plunge cutting wood, plywood, drywall and plastic materials.
Clearly mark line of cut on the work.

Hold the front housing with one hand and the rear handle with the other.
To start the cut, rest the saw on the cutting shoe, align the blade with the intended line of cut with the blade NOT touching the workpiece. Start the saw. Using the shoe as a pivot point, carefully pivot the saw forward by raising rear handle until contact with the workpiece is made. Cut slowly until the blade has cut through the work and continue raising the rear handle until the saw is fully perpendicular to the workpiece. Then continue the cut normally.

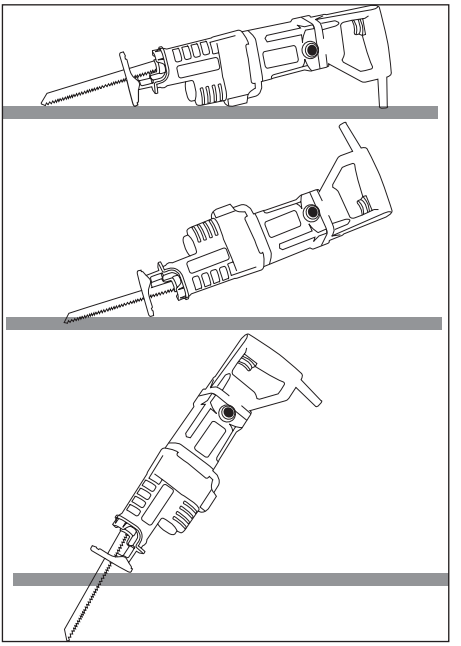

POCKET CUTS IN METAL

Since it isn't possible to blind cut in metal, The blade entry point must be started by a different method. Create a slot using an angle grinder or by drilling a starter hole with a drill.

SAWING METAL

When cutting angle metals such as channel section, I-beam, etc., start the cut in a position where the greatest number of teeth will contact the work.

To extend blade life, cutting oil can be applied to the work surface along the line of the cut.

MAINTENANCE

Every 50 hours of operation blow compressed air through the motor while running at no load to clean out accumulated dust. (If operating in especially dusty conditions, perform this operation more often.)

KEEP TOOL CLEAN

Periodically blow out all air passages with dry compressed air. All plastic parts should be cleaned with a soft damp cloth. NEVER use solvents to clean plastic parts. They could possibly eat into or dissolve the material.

Wear safety glasses while using compressed air**.**

BRUSH INSPECTION

REPLACEMENT PARTS

When servicing use only identical replacement parts.

SERVICE AND REPAIRS

All tools will eventually require servicing or replacement of parts due to wear from normal use. Always use a qualified service center. SERVICE

THE CARBON BRUSHES

The carbon brushes are a normal wearing part and must be replaced when they reach their wear limit.

Caution: Always replace the brushes as a pair

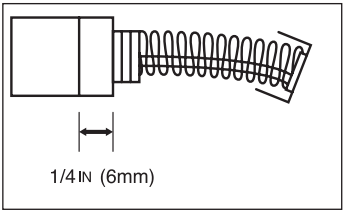

To replace:

simply remove the brush caps and withdraw the old brushes. Replace with new brushes (always replace as a pair) ensuring that they align properly and slide freely. Then replace the brush caps.

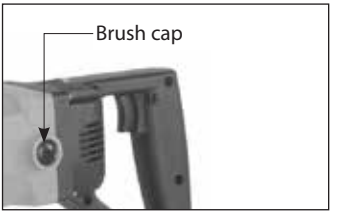

Note: If the brushes are only being checked, then make sure to replace them in the same position and orientation as before.

STANDARD ACCESSORIES

* 4 mm socket hex key

If the replacement of the power supply cord is necessary, this has to be done by the manufacturer or their agent in order to avoid a safety hazard.

WARNING: All repairs must be entrusted to an authorized service center. Incorrectly performed repairs could lead to injury or death.

WIRING

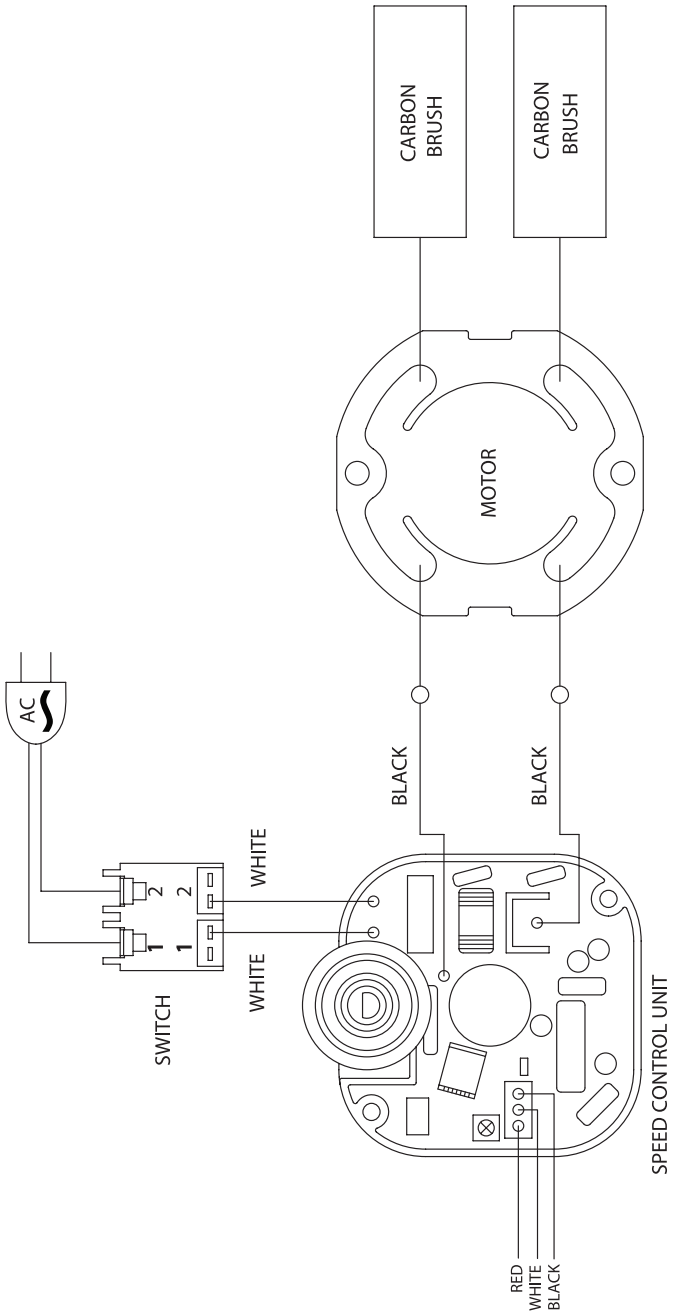
CARBON BRUSH
CARBON BRUSH
MOTOR
AC
BLACK
BLACK
WHITE
WHITE
2
2
1
1
SWITCH
SPEED CONTROL UNIT
RED
WHITE
BLACK

EXPLODED VIEW

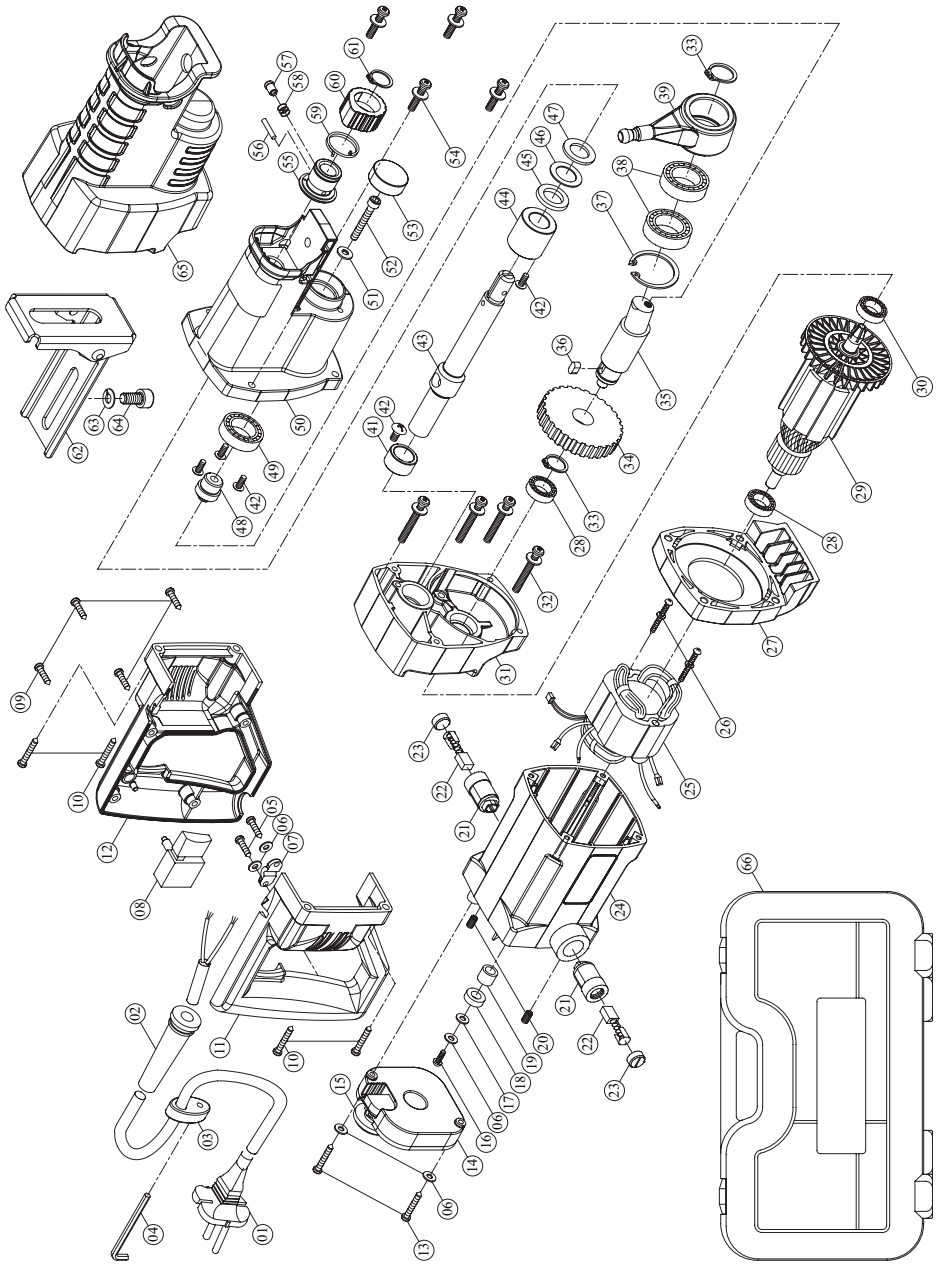

PARTS LIST

NO.	Parts Name	Q'TY	NO.	Parts Name	Q'TY
1	POWER SUPPLY CORD	1	34	OUTPUT GEAR M1.25 x 47T	1
2	CORD ARMOR	1	35	CRANK	1
3	HEX KEY HOLDER	1	36	WOODRUFF KEY 5 x 5 x 10	1
4	L-HEX WRENCH M6	1	37	EXTERNAL CIRCLIP R-35	1
5	SCREW M4 x 16	2	38	BEARING 6003 zz	2
6	FLAT WASHER ø4 x ø8 x 1	5	39	CONNECTING ROD	1
7	CORD CLIP	1	40	N/A	-
8	SWITCH	1	41	BUSHING ø16 x ø22 x 12	1
9	SCREW M4 x 20	4	42	SCREW M5 x 8	5
10	SCREW M5 x 25	4	43	RECIPROCATING SHAFT	1
11	D-HANDLE HALF-RIGHT	1	44	BUSHING ø16 x ø28 x 27	1
12	D-HANDLE HALF-LEFT	1	45	OIL SEAL UOR 16 x 25.5 x 3.4	1
13	SCREW M4 x 30	2	46	FLAT WASHER ø16.5 x ø25.4 x 1	1
14	ELECTRONICS UNIT	1	47	FELT OILER ø15.5 xø25.5 x 3	1
15	THUMB WHEEL 021C	1	48	CRANK HOLDER	1
16	SCREW M4 x 10	1	49	BEARING 6002 LLU	1
17	PLASTIC WASHER ø4 x ø11 x 1	1	50	GEAR HOUSING	1
18	PICKUP MAGNET ø8 x ø15 x	5	51	FLAT WASHER ø6 x ø18 x 2	1
19	SPACER ø8 x ø12 x 10.5	1	52	SCREW M6 x 35	1
20	SCREW M5 x 6	2	53	BEARING CAPø22 x ø28 x 10	1
21	BRUSH HOLDER 7 x 11	2	54	SCREW M5 x 25	4
22	CARBON BRUSH 7 x 11	2	55	SHAFT COVER	1
23	BRUSH CAP 7 x 11	2	56	COLLAR PIN ø3 x 18	1
24	MOTOR HOUSING	1	57	LOCKING PIN	1
25	STATOR	1	58	SPRING ø0.4 x ø6.1 x ø6.9 x 4T x 9L	1
26	STATOR SCREW M5 x 60	2	59	SPRING ø1.3 x ø23.4 x ø26 x 2.75T	1
27	FAN SHROUD	1	60	QUICK-RELEASE COLLAR	1
28	BEARING 608 zz	2	61	INTERNAL CIRCLIP S-21	1
29	ARMATURE M1.25 x 5T	1	62	SHOE PLATE	1
30	BEARING 6001-DU	1	63	SPRING WASHER M8	1
31	GEAR PLATE	1	64	SCREW M8 x 16	1
32	SCREW M5 x 45	4	65	RUBBER DRIVE HOUSING COVER	1
33	INTERNAL CIRCLIP S-17	2	66	CARRY CASE	1