Electric Mixer Machines

INSTRUCTION MANUAL
Original instructions
For your personal safety,
READ and UNDERSTAND before using.
SAVE THESE INSTRUCTIONS FOR FUTURE REFERENCE.

Version:20130504

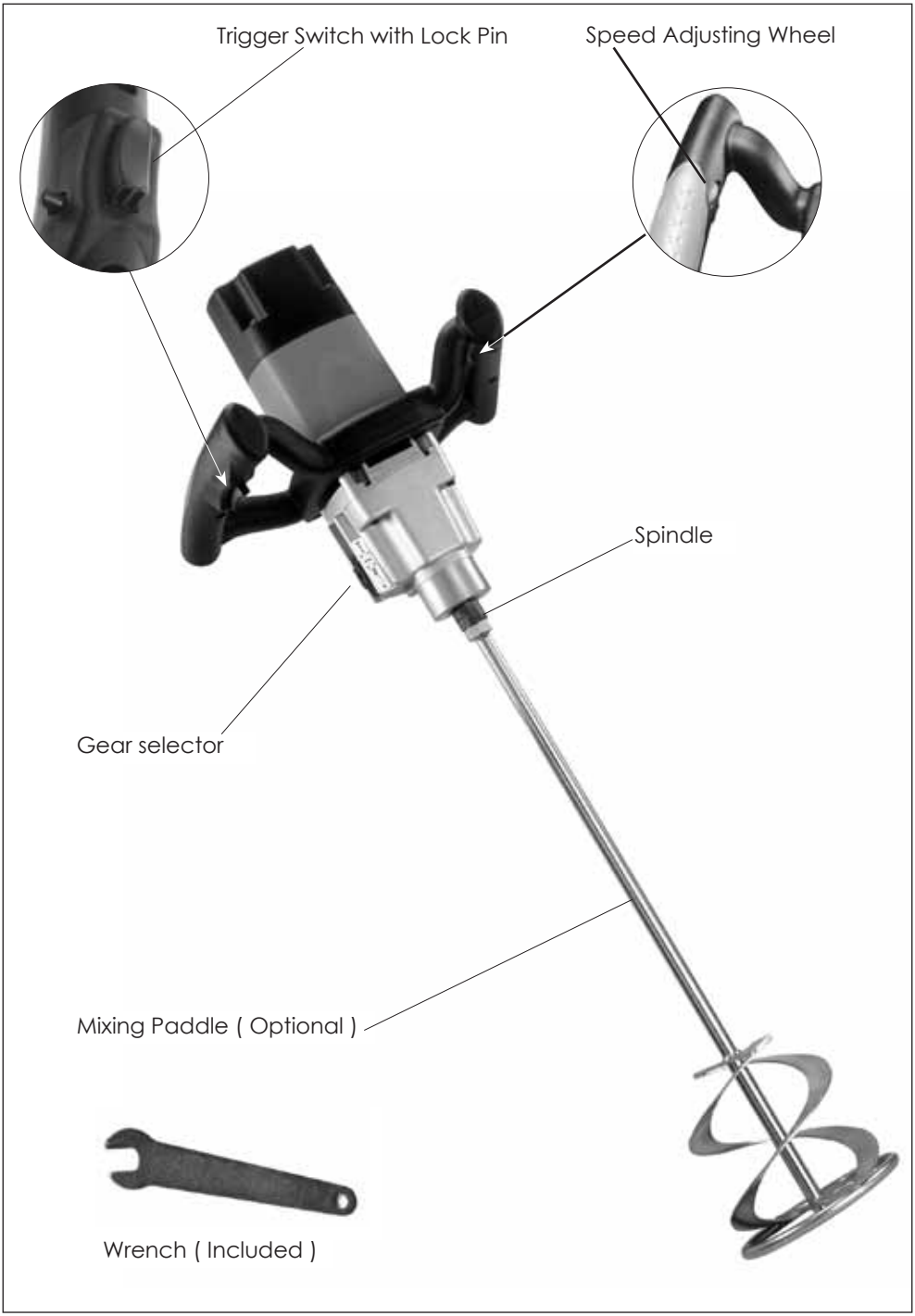
Trigger Switch with Lock Pin
Speed Adjusting Wheel
Spindle
Gear selector
Mixing Paddle (Optional)
Wrench (Included)

SPECIFICATIONS

Power Input	**800W**	**1100W**	**1300W**	**1600W**
Voltage	See machine nameplate			
N-m (Low Gear / High Gear)	6.0	11.0	27.4/17.3	42.7/29.9
Number of Gears	1	1	2	2
No Load min^{-1}	750	250-700	150-400 / 250-700	180-350 / 280-550
Protection	Double Insulation / Class II			
Coupling Thread	M14 - 2.0			
Mixing Paddle Max. Diameter	105mm	120mm	140mm	160mm
Electronic Speed Control	——	√	√	√
Weight	2.9kg	3.6kg	4.1kg	5.6kg

GENERAL SAFETY INSTRUCTIONS

WARNING! Read all safety warnings and all instructions. Failure to follow the warnings and instructions may result in electric shock, fire and/or serious injury.

Save all warnings and instructions for future reference. The term "power tool" in the warnings refers to your mainsoperated (corded) power tool or battery-operated (cordless) power tool.

1) WORK AREA SAFETY

a. **Keep work area clean and well lit.** Cluttered or dark areas invite accidents.

b. **Do not operate power tools in explosive atmospheres, such as in the presence of flammable liquids, gases or dust.** Power tools create sparks which may ignite the dust or fumes.

c. **Keep children and bystanders away while operating a power tool.** Distractions can cause you to lose control.

2) ELECTRICAL SAFETY

a. **Power tool plugs must match the outlet. Never modify the plug in any way. Do not use any adapter plugs with earthed (grounded) power tools.** Unmodified plugs and matching outlets will reduce risk of electric shock.

b. **Avoid body contact with earthed or grounded surfaces such as pipes, radiators, ranges and refrigerators.** There is an increased risk of electric shock if your body is earthed or grounded.

c. **Do not expose power tools to rain or wet conditions.** Water entering a power tool will increase the risk of electric shock.

d. **Do not abuse the cord. Never use the cord for carrying, pulling or unplugging the power tool. Keep cord away from heat, oil, sharp edges or moving parts.** Damaged or entangled cords increase the risk of electric shock.

e. **When operating a power tool outdoors, use an extension cord suitable for outdoor use.**

Use of a cord suitable for outdoor use reduces the risk of electric shock.

f. **If operating a power tool in a damp location is unavoidable, use an earth leakage circuit breaker.** Use of an earth leakage circuit breaker reduces the risk of electric shock.

3) PERSONAL SAFETY

a. **Stay alert, watch what you are doing and use common sense when operating a power tool. Do not use a power tool while you are tired or under the influence of drugs, alcohol or medication.** A moment of inattention while operating power tools may result in serious personal injury.

b. **Use personal protective equipment. Always wear eye protection.** Protective equipment such as dust mask, non-skid safety shoes, hard hat, or hearing protection used for appropriate conditions will reduce personal injuries.

c. **Prevent unintentional starting. Ensure the switch is in the off-position before connecting to power source and/or battery pack, picking up or carrying the tool.** Carrying power tools with your finger on the switch or energising power tools that have the switch on invites accidents.

d. **Remove any adjusting key or wrench before turning the power tool on.** A wrench or a key left attached to a rotating part of the power tool may result in personal injury.

e. **Do not overreach. Keep proper footing and balance at all times.** This enables better control of the power tool in unexpected situations.

f. **Dress properly. Do not wear loose clothing or jewelry. Keep your hair, clothing and gloves away from moving parts.** Loose clothes, jewelry or long hair can be caught in moving parts.

g. **If devices are provided for the connection of dust extraction and collection facilities, ensure these are connected and properly used.** Use of dust collection can reduce dust-related hazards.

4) POWER TOOL USE AND CARE

a. **Do not force the power tool. Use the correct power tool for your application.** The correct power tool will do the job better and safer at the rate for which it was designed.

b. **Do not use the power tool if the switch does not turn it on and off.** Any power tool that cannot be controlled with the switch is dangerous and must be repaired.

c. **Disconnect the plug from the power source and/or the battery pack from the power tool before making any adjustments, changing accessories, or storing power tools**. Such preventive safety measures reduce the risk of starting the power tool accidentally.

d. **Store idle power tools out of the reach of children and do not allow persons unfamiliar with the power tool or these instructions to operate the power tool.** Power tools are dangerous in the hands of untrained users.

e. **Maintain power tools. Check for misalignment or binding of moving parts, breakage of parts and any other condition that may affect the power tool's operation. If damaged, have the power tool repaired before use.** Many accidents are caused by poorly maintained power tools.

f. **Keep cutting tools sharp and clean.** Properly maintained cutting tools with sharp cutting edges are less likely to bind and are easier to control.

g. **Use the power tool, accessories and tool bits etc., in accordance with these instructions, taking into account the working conditions and the work to be performed.** Use of the power tool for operations different from those intended could result in a hazardous situation.

5) SERVICE

Have your power tool serviced by a qualified repair person using only identical replacement parts. This will ensure that the safety of the power tool is maintained.

Symbols used in this manual

V……....volts
A……....amperes
Hz……....hertz
W……....watt
~……....alternating current
n_o……..no load speed
min^{-1}……....revolutions or reciprocation per minute


……warning of general danger


…..class II tool


….with electrical earth


…….read these instructions


……always wear eye protection


……always wear a dust mask.


…..always wear hearing protection


…..wear safety-approved hard hat


do not dispose of electric tools, accessories and packaging together with household waste material

Specific Safety rules

- Do not mix any solvents or solvent mixtures with a low flash point (below 20C, 70F).
- Keep the power cable away from the mixing paddle.
- Do not wrap the power cable around the body.
- Only operate the machine (including start up and coast down) with the paddle inside the mixing container.
- Never reach into the mixing container or stick objects into the mixing container while mixing is in progress.
- Keep both hands on the handles at all times.
- Ensure that the paddle has come to a complete stop before putting the machine down.

Wire Sizes

NOTE: Make sure the proper extension cord is used and is in good condition. Use only 3-wire extension cords that have 3-prong grounding plugs and 3-pole receptacles that accept the tool's plug. The use of any extension cord will cause some loss of power. To keep this to a minimum and to prevent overheating and motor burn-out, use the table at right to determine the minimum wire size (A.W.G.) extension cord.

Total Extension Cord Length (feet)	Cord Size (AWG)
25	16
50	12
100	10
150	8
200	6

Safety Symbols

CAUTION: indicates a potentially hazardous situation which, if not avoided may result in minor or moderate injury. It may also be used to alert against unsafe practices that may cause property damage.

DANGER: indicates an imminently hazardous situation which if not avoided will result in death or serious injury.

WARNING: indicates a potentially hazardous situation which if not avoided will result in death or serious injury.

Before Using This Tool

WARNING: Some dust created by the power sanding, sawing, grinding, drilling and other construction activities contains chemicals known to cause cancer, birth defects or other reproductive harm. Some examples of these chemicals are:

- Lead from lead-bases paints,
- Crystalline silica from bricks, cement and other masonry products,
- Arsenic and chromium from chemically treated lumber.

- Lead from lead-bases paints,
- Crystalline silica from bricks, cement and other masonry products,
- Arsenic and chromium from chemically treated lumber.

Your risk from these exposures varies, depending on how often you do this type of work. To reduce your exposure to these chemicals, work in a well ventilated area, work with approved safety equipment such as dust masks specially designed to filter out microscopic particles

Unpacking and Checking Content

Unpacking

WARNING: To reduce the risk of injury from unexpected starting or electrical shock, do not plug the power cord into a power source outlet during unpacking and assembly. This cord must remain unplugged whenever you are working on the tool.

Your tool is shipped complete in one box.

- Remove the tool and all loose parts from the carton.
- Place all parts on a secure, stationary work surface and look the machine over carefully.

List of Loose Parts

The following parts are included:

NOTE: Before beginning assembly, check that all parts are included. If you are missing any part, do not assemble the machine. Sometimes small parts can get lost in packaging material. Do not throw away any packaging until tool is put together. Check packaging for missing parts. A complete parts list (Repair Parts) is at the end of the manual. Use the list to identify the number of the missing part.

WARNING: If any parts are missing do not operate your Electric Stirrer until the missing parts are replaced. Failure to do so could result in possible serious injury.

Part or Assembly Qty

Basic Assembly..... 1
Wrench.....1
Operator's Manual 1

Basic Operation

Switch

On/Off Trigger Switch - To start the machine, squeeze the trigger switch. Release the trigger switch to stop the motor. This machine is equipped with a lock-on arrestor pin. If continuous operation is required, squeeze the trigger and press the arrestor pin. To stop, squeeze and release the trigger switch.

Speed Adjustment

By turning the thumb operated adjustor wheel, the speed may be adjusted electronically for best mixing performance in a given medium.

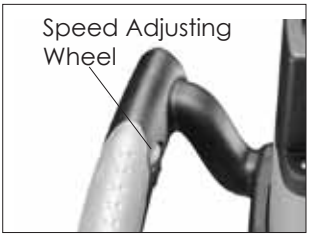

Gear Changes

On 2 speed range models, there is a gear selector slider on the gearbox housing. Use low speed range for best torque in extremely viscous media. To select a gear range, first shut down the machine. Push in on the selector slider against spring tension and slide up or down to select the desired range. Ensure that the gears engage fully. It is sometimes helpful to turn the arbor slightly to allow the gears to fully engage.

NOTE: Please switch the machine "Off" before changing the gears.

How to use the Tool

Effective control of this machine requires two-handed operation for maximum protection and resistance to the start-up and operating torque. Place the work properly and to hold the machine firmly WITH BOTH HANDS to prevent loss of control which could cause personal injury. Protect your eyes from injury with safety glasses or goggles.

WARNING: Keep the cord behind the operator and away from mixing area to prevent it from becoming entangled in the paddle.

Handles

The handles of the Electric Stirrer are designed for an optimum grip. It allows the operator to work comfortably for extented periods of operation.

Handles Placing Position

Please pay attention when placing the Electric Stirrer on the ground. Please see correct positioning of the Stirrer.

CAUTION: Incorrect placing of the unit on the ground (ie. placing with the cable pointing down) may cause damage to the power supply cable, increasing the possibility of electric shock and damage to the machine.

Maintenance

WARNING: To reduce the risk of injury from unexpected starting or electrical shock, unplug the power cord before working on the machine.

Keep the tool clean. Remove accumulated dust from working parts. Make sure that the tool operates properly. Periodically check screws and bolts for tightness.

Keeping Tool Clean

Periodically blow out all air passages with dry compressed air every 100 hours of use. All plastic parts should be cleaned with a soft damp cloth. NEVER use solvents to clean plastic parts. They could possibly dissolve or otherwise damage the material. Wear safety glasses while using compressed air. Every 200 hours, have the lubricant in the gearbox replaced by a qualified service center.

Replacing Carbon Brushes

The carbon brushes furnished will last approximately 50 hours of running time or 10,000 on/off cycles. Replace both carbon brushes when either has less than 1/4" length of carbon remaining. To inspect or replace brushes, first unplug the machine. Unscrew the motor housing by removing the four screws. Pull back on the carbon brush springs to release the tension. Unscrew the screw holding the carbon brush lead. Then pull out the brush. Repeat for the other side. To reassemble reverse the procedure. The ears on the metal end of the brush assembly go in the same hole the carbon part fits into.

NOTE: To reinstall the same brushes, first make sure the brushes go back in the way they came out. Otherwise a break-in period will occur that will reduce motor performance and increase brush wear. It is recommended that, at least once a year, you take the tool to an Authorized Service Center for a thorough cleaning and lubrication.

WARNING: To ensure safety and reliability, all repairs, with the exception of externally accessible brushes, should be performed at an Authorized Service Center.

If the replacement of the power supply cord is necessary, this has to be done by the manufacturer or their agent in order to avoid a safety hazard.

WARNING: All repairs must be entrusted to an authorized service center. Incorrectly performed repairs could lead to injury or death.

800W WIRING

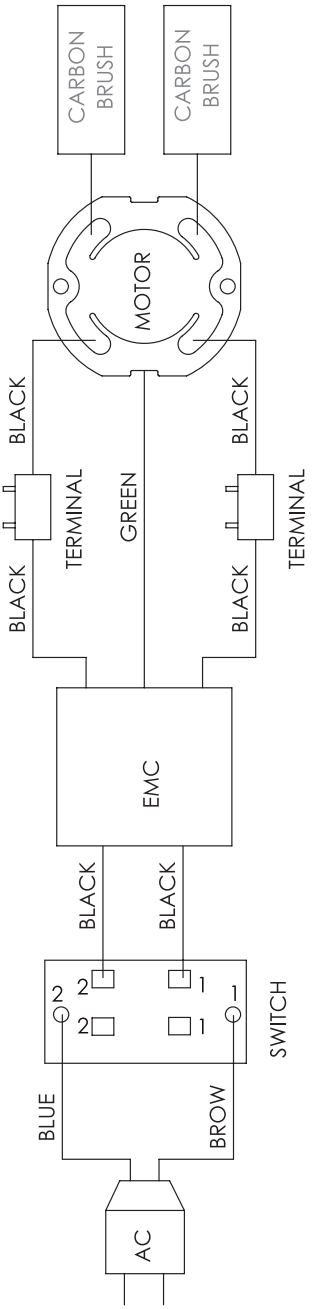
CARBON BRUSH
CARBON BRUSH
MOTOR
BLACK
BLACK
TERMINAL
GREEN
TERMINAL
BLACK
BLACK
EMC
BLACK
BLACK
2
2
2
1
1
1
SWITCH
BLUE
BROW
AC

1100W, 1300W WIRING

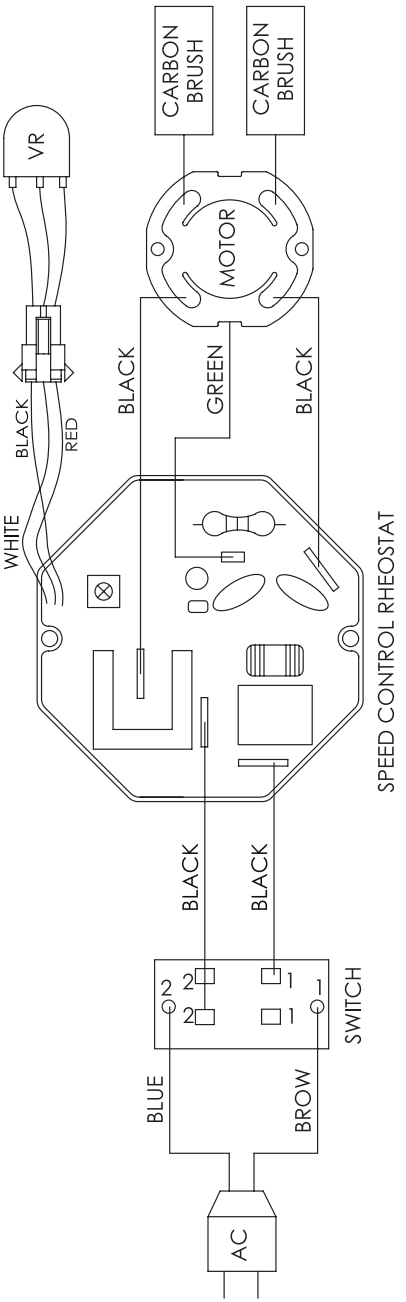

1600W WIRING

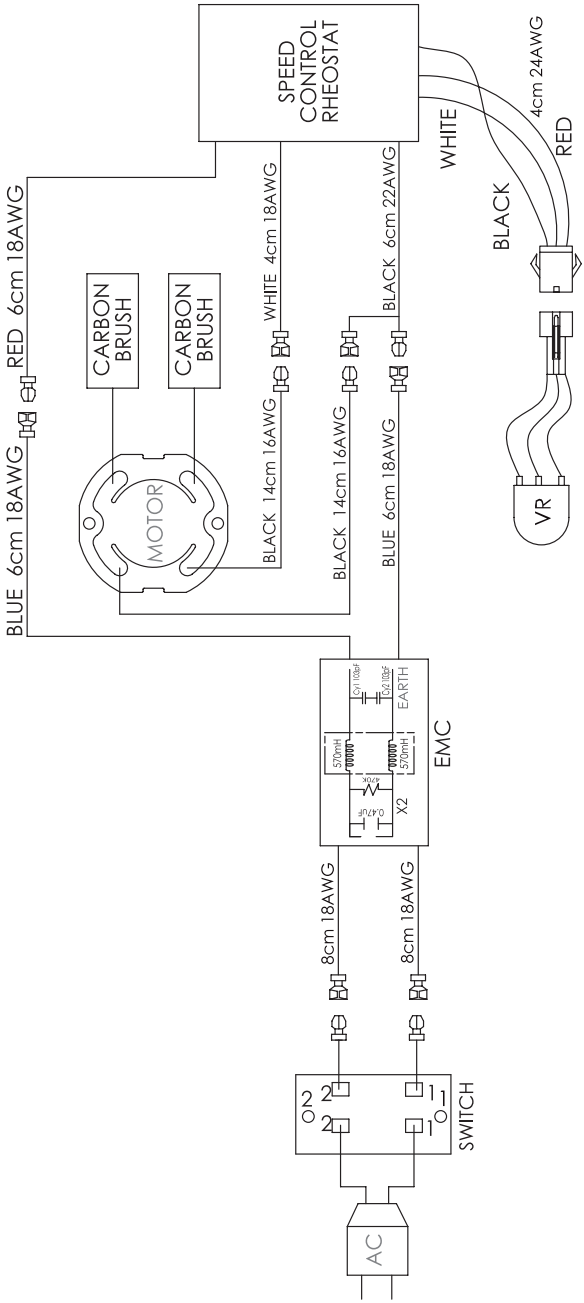

800W Exploded View

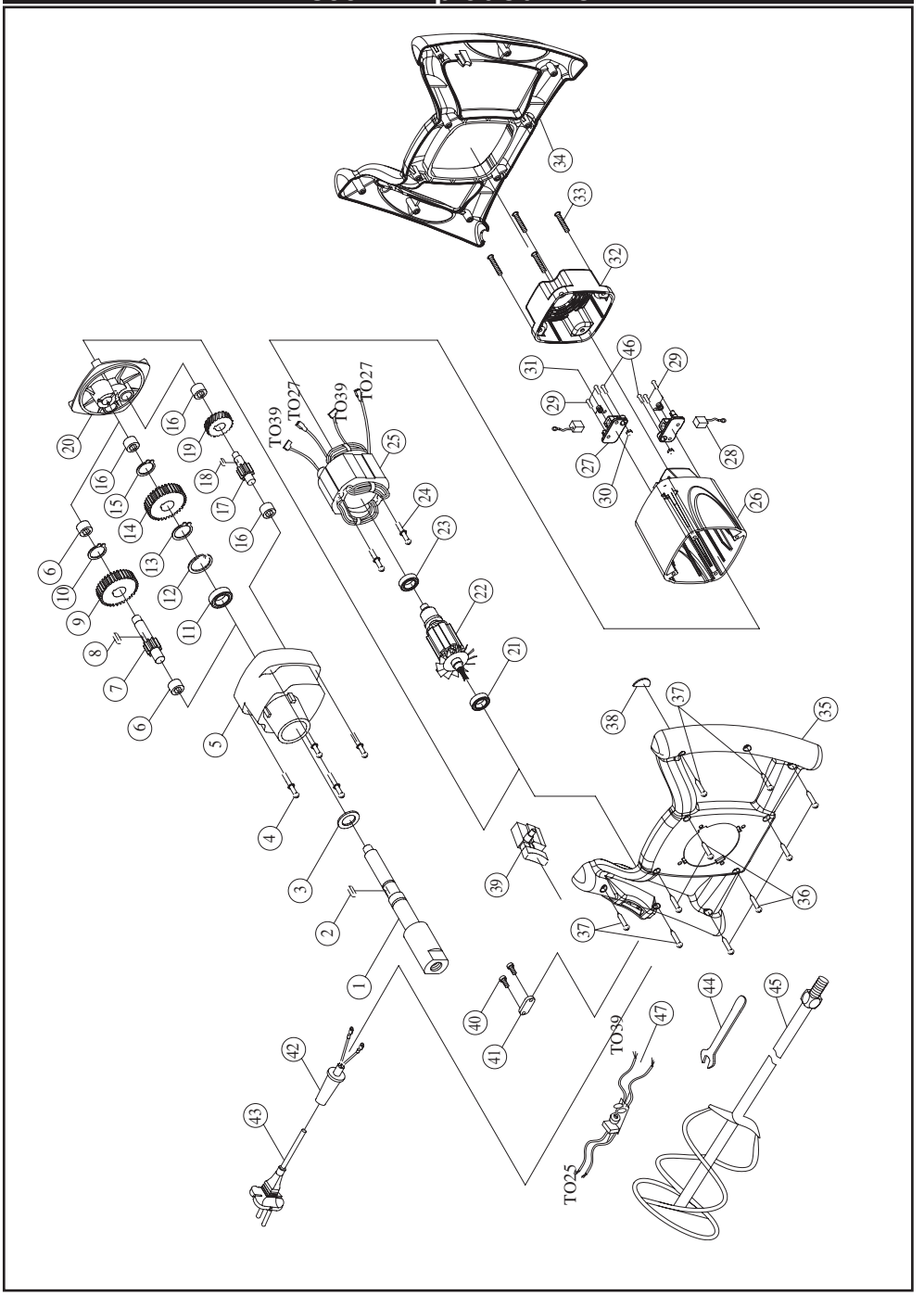

800W Parts list

No.	Parts Name		Q'TY
1	SPINDLE	M14xP2.0	1
2	WOODRUFF KEY	5x5x12	1
3	SEAL	22x32x7	1
4	SCREW INCL. SPRING WASHER	M5x60	4
5	GEAR HOUSING		1
6	NEEDLE BEARING	HK1010	2
7	GEAR PINION	10T-080	1
8	WOODRUFF KEY	5x5x10	1
9	COUNTERSHAFT	30T	1
10	SNAP RING	S-12	1
11	BALL BEARING	6003ZZ	1
12	SNAP RING	R-35	1
13	SNAP RING	S-17	1
14	SPINDLE GEAR	34T	1
15	SNAP RING	S-15	1
16	NEEDLE BEARING	HK0810	3
17	GEAR PINION	14T	1
18	WOODRUFF KEY	4x4x8	1
19	COUNTERSHAFT	37T	1
20	GEAR COVER		1
21	BALL BEARING	609 2RS	1
22	ARMATURE	230V	1
23	BALL BEARING	608ZZ	1
24	SCREW INCL. SPRING WASHER	M5x45	2
25	STATOR	230V	1
26	MOTOR HOUSING		1
27	BRUSH HOLDER		2
28	CARBON BRUSH		2
29	SCREW	M4x12	4
30	HEX NUT	M4	2
31	SPRING		2
32	TAIL COVER		1
33	SCREW	M5x20	4
34	HANDLE BODY (TOP)		1
35	HANDLE BODY (BOTTOM)		1
36	SCREW	M4x20	6
37	SCREW	M4x25	4
38	BLANKING PLUG		1
39	SWITCH	8301 230V	1
40	SCREW	M4x14	2
41	CORD CLIP		1
42	CORD ARMOR		1
43	POWER SUPPLY CORD		1
44	WRENCH M22		1
45	MIXING PADDLE		1
46	SCREW	M4x10	2
47	EMC		1

1100W Exploded View

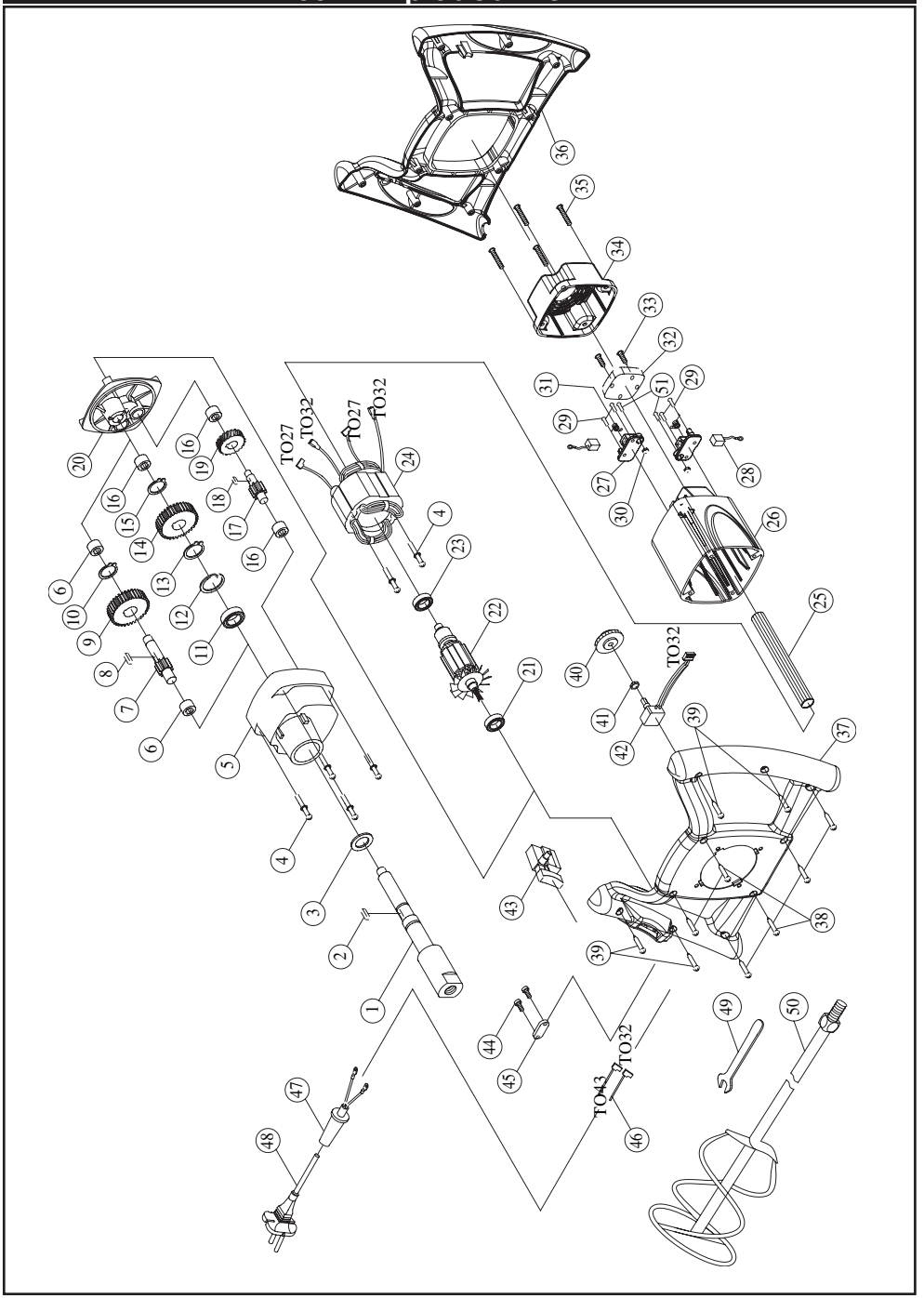

1100W Parts list

No.	Parts Name		Q'TY
1	SPINDLE	M14xP2.0	1
2	WOODRUFF KEY	5x5x12	1
3	SEAL	22x32x7	1
4	SCREW INCL. SPRING WASHER	M5*60	6
5	GEAR HOUSING		1
6	NEEDLE BEARING	HK1010	2
7	GEAR PINION	10T-080	1
8	WOODRUFF KEY	5x5x10	1
9	COUNTERSHAFT	30T	1
10	SNAP RING	S-12	1
11	BEARING	6003ZZ	1
12	SNAP RING	R-35	1
13	SNAP RING	S-17	1
14	SPINDLE GEAR	34T	1
15	SNAP RING	S-15	1
16	NEEDLE BEARING	HK0810	3
17	GEAR PINION	14T	1
18	WOODRUFF KEY	4x4x8	1
19	COUNTERSHAFT	37T	1
20	GEARING COVER		1
21	BEARING	609 2RS	1
22	ARMATURE	230V	1
23	BEARING	608ZZ	1
24	STAROT	230V	1
25	WIRE SHEATH	M8	1
26	MOTOR HOUSING		1
27	BRUSH HOLDER		2
28	CARBON BRUSH		2
29	SCREW	M4x12	4
30	HEX NUT	M4	2
31	SPRING		2
32	SENSOR WITH EMC	230V	1
33	SCREW	M4x25	2
34	MOTOR COVER		1
35	SCREW	M5x20	4
36	HANDLE BODY (TOP)		1
37	HANDLE BODY (BOTTOM)		1
38	SCREW	M4x20	6
39	SCREW	M4x25	4
40	SPEED ADJUSTING WHEEL		1
41	HEX NUT	1/4"x34	1
42	ELECTRONIC SPEED ADJUSTOR	B100K	1
43	SWITCH	8301 230V	1
44	SCREW	M4x14	2
45	CORD CLIP		1
46	WIRE LEAD16AWG		2
47	CORD ARMOR		1
48	POWER SUPPLY CORD	230V	1
49	WRENCH	M22	1
50	MIXING PADDLE		1
51	SCREW	M4x10	2

1300W Exploded View

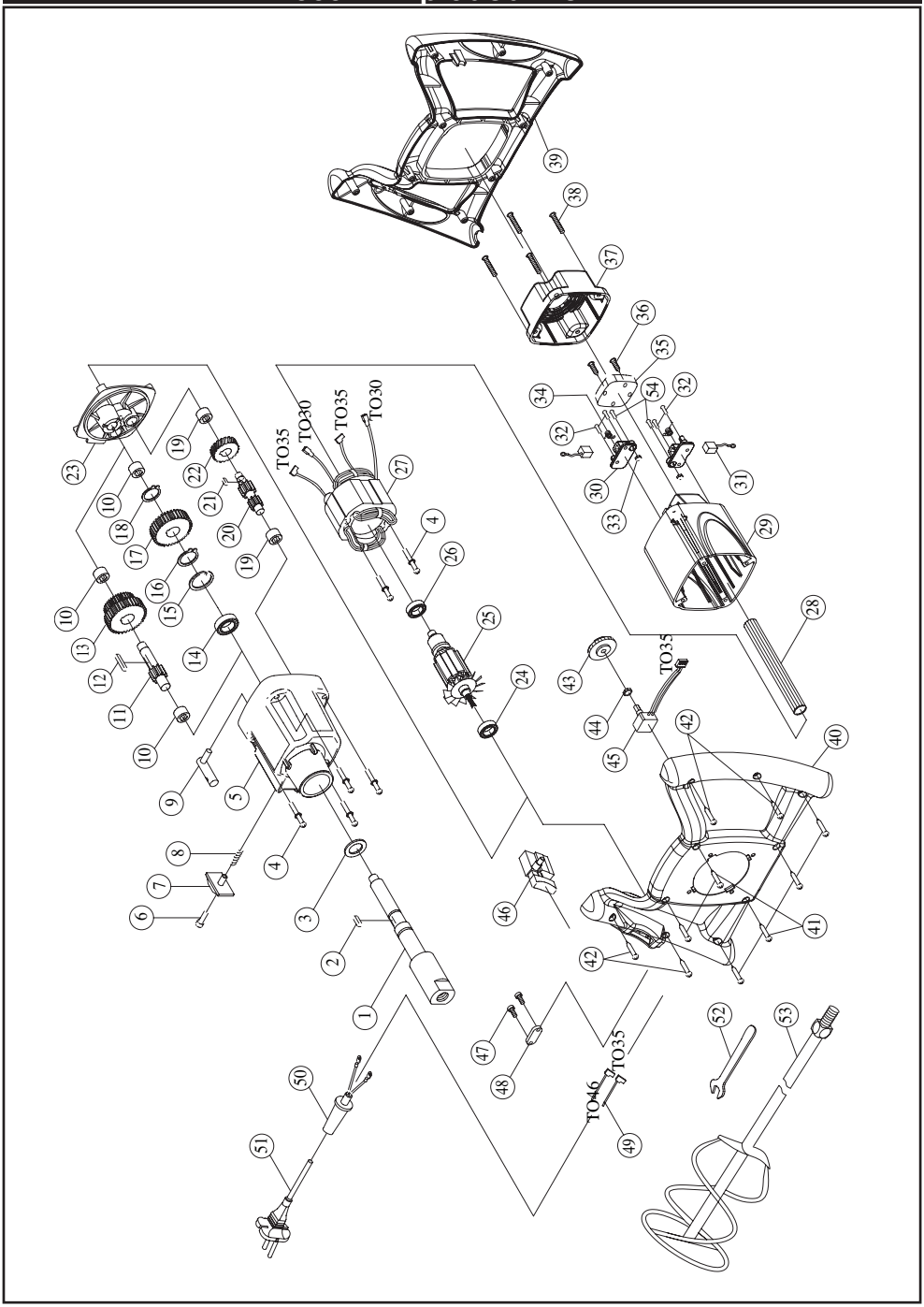

1300W Parts list

No.	Parts Name		Q'TY
1	SPINDLE	M14xP2.0	1
2	WOODRUFF KEY	5x5x12	1
3	SEAL	22x32x7	1
4	SCREW INCL. SPRING WASHER	M5*60	6
5	GEAR HOUSING		1
6	SLOT HEAD SCREW		1
7	SELECTOR SLIDER		1
8	SPRING	φ6x0.6x4	1
9	SELECTOR FORK		1
10	NEEDLE BEARING	HK1010	3
11	GEAR PINION	10T-130	1
12	WOODRUFF KEY	5x5x45	1
13	COUNTERSHAFT	30T &34T	1
14	BEARING 6003ZZ		1
15	SNAP RING	R-35	1
16	SNAP RING	S-17	1
17	SPINDLE GEAR	34T	1
18	SNAP RING	S-15	1
19	NEEDLE BEARING	HK0810	2
20	GEAR PINION	14T &10T	1
21	WOODRUFF KEY	4x4x8	1
22	COUNTERSHAFT	37T	1
23	GEARING COVER		1
24	BEARING	609 2RS	1
25	ARMATURE	230V	1
26	BEARING	608ZZ	1
27	STATOR	230V	1
28	WIRE SHEATH	M8	1
29	MOTOR HOUSING		1
30	BRUSH HOLDER		2
31	CARBON BRUSH		2
32	SCREW	M4x12	4
33	HEX NUT	M4	2
34	SPRING		2
35	SENSOR WITH EMC	230V	1
36	SCREW	M4x25	2
37	MOTOR HOUSING COVER		1
38	SCREW	M5x20	4
39	HANDLE BODY (TOP)		1
40	HANDLE BODY (BOTTOM)		1
41	SCREW	M4x20	6
42	SCREW	M4x25	4
43	SPEED ADJUSTING WHEEL		1
44	HEX NUT	1/4"x34	1
45	ELECTRONIC SPEED ADJUSTOR	B100K	1
46	SWITCH	8301 230V	1
47	SCREW	M4x14	2
48	CORD CLIP		1
49	WIRE LEAD	16AWG	2
50	CORD ARMOR		1
51	POWER SUPPLY CORD	230V	1
52	WRENCH	M22	1
53	MIXING PADDLE		1
54	SCREW	M4x10	2

1600W Exploded View

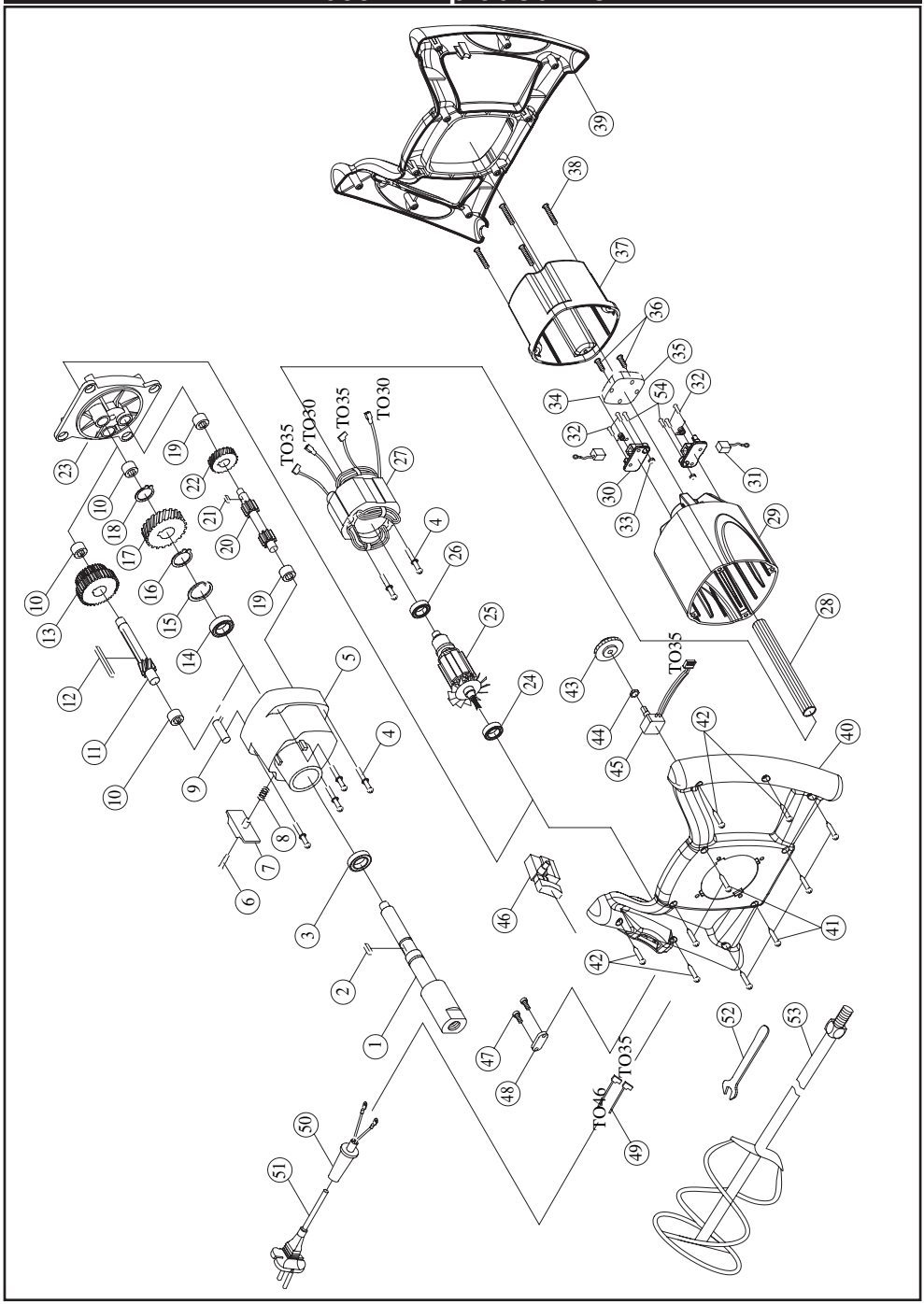

1600W Parts list

No.	Parts Name		Q'TY
1	SPINDLE	M14xP2.0	1
2	WOODRUFF KEY	5x5x12	1
3	SEAL	22x32x7	1
4	SCREW INCL. SPRING WASHER	M5x60	6
5	GEAR HOUSING		1
6	SLOT HEAD SCREW		1
7	SELECTOR SLIDER		1
8	SPRING	φ6x0.6x4	1
9	SELECTOR FORK		1
10	NEEDLE BEARING	HK1010	3
11	GEAR PINION	10T	1
12	WOODRUFF KEY	5x5x50	1
13	COUNTERSHAFT	33T 30T	1
14	BEARING	6204ZZ	1
15	SNAP RING	R-47	1
16	SNAP RING	S-20	1
17	SPINDLE GEAR	39T	1
18	SNAP RING	S-15	1
19	NEEDLE BEARING	HK0810	2
20	GEAR PINION	13T 10T	1
21	WOODRUFF KEY	5x5x8	1
22	COUNTERSHAFT	29T	1
23	GEARING COVER		1
24	BEARING	6202 2RS	1
25	ARMATURE	230V	1
26	BEARING	6200ZZ	1
27	STATOR	230V	1
28	WIRE SHEATH	M8	1
29	MOTOR HOUSING		1
30	BRUSH HOLDER		2
31	CARBON BRUSH		2
32	SCREW	M4x12	4
33	HEX NUT	M4	2
34	SPRING		2
35	SENSOR WITH EMC	230V	1
36	SCREW	M4x10	2
37	MOTOR HOUSING COVER		1
38	SCREW	M5x20	4
39	HANDLE BODY (TOP)		1
40	HANDLE BODY (BOTTOM)		1
41	SCREW	M4x20	6
42	SCREW M4x25		4
43	SPEED ADJUSTING WHEEL		1
44	HEX NUT 1/4"x34		1
45	ELECTRONIC SPEED ADJUSTOR	B100K	1
46	SWITCH	8301 230V	1
47	SCREW	M4x14	2
48	CORD CLIP		1
49	WIRE LEAD16AWG		2
50	CORD ARMOR		1
51	POWER SUPPLY CORD	230V	1
52	WRENCH	M22	1
53	MIXING PADDLE		1
54	SCREW	M4x10	2