Original instructions

Original instructions

For your personal safety,

READ and UNDERSTAND before using.

SAVE THESE INSTRUCTIONS

FOR FUTURE REFERENCE.

42V High Frequency Concrete Vibrator

FUNCTIONAL DESCRIPTION

(Power Converter sold separately)

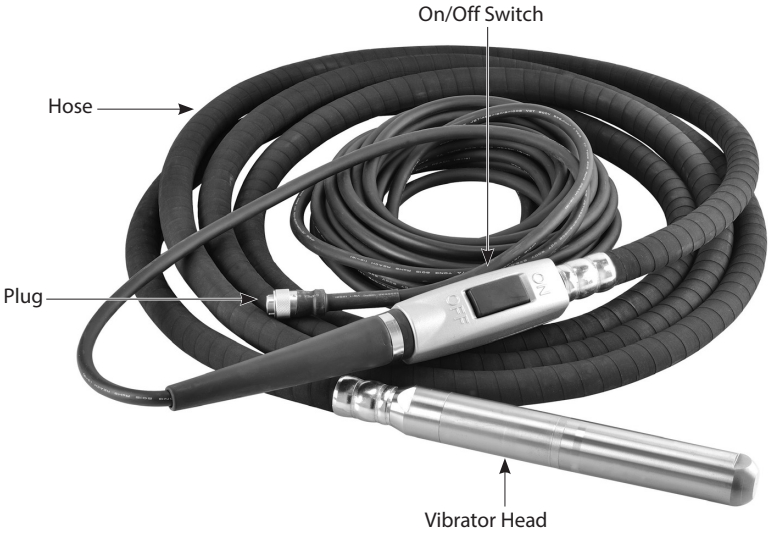

Model	42mm Long Model	50mm Long Model
Voltage	42V	42V
Vibration Rate	12,000 - 14,500 vpm	12,000 - 14,500 vpm
Power Output	260W	400W
Centrifugal Force	1650~2150 N	2250~3300 N
Vibrator Head Size	ø42 x 300mm	ø50 x 305mm
Hose Size	ø36mm x 6m	ø36mm x 6m
Net Weight	11 kg (24.25 Lbs)	12 kg (26.46 Lbs)

GENERAL SAFETY INSTRUCTIONS

WARNING! Read all safety warnings and all instructions. Failure to follow the warnings and instructions may result in electric shock, fire and/or serious injury.

Save all warnings and instructions for future reference. The term "power tool" in the warnings refers to your mainsoperated (corded) power tool or battery-operated (cordless) power tool.

1) WORK AREA SAFETY

a. **Keep work area clean and well lit.** Cluttered or dark areas invite accidents.

b. **Do not operate power tools in explosive atmospheres, such as in the presence of flammable liquids, gases or dust.** Power tools create sparks which may ignite the dust or fumes.

c. **Keep children and bystanders away while operating a power tool.** Distractions can cause you to lose control.

2) ELECTRICAL SAFETY

a. **Power tool plugs must match the outlet. Never modify the plug in any way. Do not use any adapter plugs with earthed (grounded) power tools.**
Unmodified plugs and matching outlets will reduce risk of electric shock.

b. **Avoid body contact with earthed or grounded surfaces such as pipes, radiators, ranges and refrigerators.** There is an increased risk of electric shock if your body is earthed or grounded.

c. **Do not expose power tools to rain or wet conditions.** Water entering a power tool will increase the risk of electric shock.

d. **Do not abuse the cord. Never use the cord for carrying, pulling or unplugging the power tool. Keep cord away from heat, oil, sharp edges or moving parts.** Damaged or entangled cords increase the risk of electric shock.

e. **When operating a power tool outdoors, use an extension cord suitable for outdoor use**. Use of a cord suitable for outdoor use reduces the risk of electric shock.

f. **If operating a power tool in a damp location is unavoidable, use an earth leakage circuit breaker.** Use of an earth leakage circuit breaker reduces the risk of electric shock.

3) PERSONAL SAFETY

a. **a) Stay alert, watch what you are doing and use common sense when operating a power tool. Do not use a power tool while you are tired or under the influence of drugs, alcohol or medication**. A moment of inattention while operating power tools may result in serious personal injury.

b. **b) Use personal protective equipment. Always wear eye protection.** Protective equipment such as dust mask, non-skid safety shoes, hard hat, or hearing protection used for appropriate conditions will reduce personal injuries.

c. **Prevent unintentional starting. Ensure the switch is in the off-position before connecting to power source and/or battery pack, picking up or carrying the tool.** Carrying power tools with your finger on the switch or energising power tools that have the switch on invites accidents.

d. **Remove any adjusting key or wrench before turning the power tool on.** A wrench or a key left attached to a rotating part of the power tool may result in personal injury.

e. **Do not overreach. Keep proper footing and balance at all times.** This enables better control of the power tool in unexpected situations.

f. **Dress properly. Do not wear loose clothing or jewelry. Keep your hair, clothing and gloves away from moving parts.** Loose clothes, jewelry or long hair can be caught in moving parts.

g. **If devices are provided for the connection of dust extraction and collection facilities,**

ensure these are connected and properly used. Use of dust collection can reduce dust-related hazards.

4) POWER TOOL USE AND CARE

a. **Do not force the power tool. Use the correct power tool for your application.** The correct power tool will do the job better and safer at the rate for which it was designed.

b. **Do not use the power tool if the switch does not turn it on and off.** Any power tool that cannot be controlled with the switch is dangerous and must be repaired.

c. **Disconnect the plug from the power source and/or the battery pack from the power tool before making any adjustments, changing accessories, or storing power tools.** Such preventive safety measures reduce the risk of starting the power tool accidentally.

d. **Store idle power tools out of the reach of children and do not allow persons unfamiliar with the power tool or these instructions to operate the power tool.** Power tools are dangerous in the hands of untrained users.

e. **Maintain power tools. Check for misalignment or binding of moving parts, breakage of parts and any other condition that may affect the power tool's operation. If damaged, have the power tool repaired before use.** Many accidents are caused by poorly maintained power tools.

f. **Keep cutting tools sharp and clean.** Properly maintained cutting tools with sharp cutting edges are less likely to bind and are easier to control.

g. **Use the power tool, accessories and tool bits etc., in accordance with these instructions, taking into account the working conditions and the work to be performed.** Use of the power tool for operations different from those intended could result in a hazardous situation.

5) SERVICE

Have your power tool serviced by a qualified repair person using only identical replacement parts. This will ensure that the safety of the power tool is maintained.

Symbols used in this manual

V…….....volts
A…….....amperes
Hz…….....hertz
W…….....watt
~……....alternating current
n_o……..no load speed
min^{-1}….....revolutions or reciprocation per minute


.....warning of general danger


….with electrical earth


.....read these instructions


.....always wear eye protection


.....always wear a dust mask.


.....always wear hearing protection


.....wear safety-approved hard hat


do not dispose of electric tools, accessories and packaging together with household waste material

SPECIFIC SAFETY RULES

DO NOT let comfort or familiarity with the product (gained from repeated use) replace strict adherence to concrete vibrator safety rules. If you use this tool unsafely or incorrectly, you can suffer serious personal injury.

1. **Always keep hands and face away from vibrating head when operating.**
2. **Switch off the tool immediately if you notice abnormal noise or something faulty during operation.**
3. **Inspect the tool carefully for breakage, deformation or cracks if you accidentally drop it or strike it against something.**
4. **Do not set the tool down and switch it on. The vibrating head may whip around out of control and cause an accident.**
5. **Be extra careful when inserting the vibrating head between iron/steel frames or reinforcing rods to not come in contact with them.**
6. **Do not crush or twist the flexible hose.**
7. **Use a wet cloth or similar method to carefully wipe off any wet concrete left on the tool after use.**
8. **Since this tool produces vibration, it is necessary to periodically check for loose screws.**

UNPACKING

Carefully remove the tool and all loose items from the shipping container.
Retain all packing materials until after you have inspected and satisfactorily operated the machine.

CARTON CONTENTS

1. Vibrator unit

INTRODUCTION

This vibrator unit uses a 42 volt, high frequency motor which is mounted directly in the vibrator head. It requires the use of a special power converter to supply it with the required voltage and frequency. It has a special plug to connect it to the converter.

ELECTRICAL CONNECTION

Check to be sure that the vibrator unit's switch is in the OFF position and that the converter is unplugged from the electrical supply, then plug the unit's plug into the special socket on the power converter.
If the plug does not match with the socket, it may not be used. Only use plugs and connections which are designed specifically for this device.
Once the vibrator unit and the converter are connected, plug the conterter into the electrical supply.

STARTING AND STOPPING TOOL

First ensure that the vibrator unit's switch is in the off position, then press the power button to energize the converter. Allow about 5 seconds for its capacitors to charge before turning the vibrator unit on and putting it to use.

For long models, push the vibrator unit's slider switch forward to turn ON and back to turn OFF. For short models, squeeze the trigger switch to turn ON and release to turn OFF. To lock on, press the lock pin. To unlock, squeeze the trigger and then release. After the vibrator unit's switch is off, then turn off the converter by pressing the power button.
Always keep the converter unplugged when not in use.

SPEED ADJUSTMENT

On converters with frequency control, the speed of the vibrator unit is adjustable from 12,000 rpm up to 14,500 rpm in increments of 500 as displayed on the screen. To increase, press the "Up" arrow (Frequency increase) button as many times as necessary to acheive the desired speed. To decrease, press the "Down" arrow (Frequency decrease) button.

OPERATION

Hold the tool straight when inserting/operating. Use the tool within the effective vibrations range at equidistant intervals.
The effective air bubble removal range is about ten times the diameter of the vibrating head.

Do not use this tool to move concrete within a form. The mortar will just move away and the coarse aggregate will remain, causing segregation.
Always insert and remove the head vertically and remove slowly.
With each insertion, continue vibrating until there are no more bubbles and the surface looks shiny. This normally takes about 10 to 20 seconds.

Effective leveling and removal of air bubbles

Removal of the air bubbles is complete after you have worked the tool throughout each effective range, the concrete stops shrinking, and the mortar has risen evenly to the surface, giving off a light appearance. Gently remove the operating tool to avoid leaving holes.
Never vibrate against rebar. Keep a distance of about 75mm away if possible.

NOTE: Vibrating too long in a single place causes concrete segregation.
When the coarse aggregate segregates when placing concrete, shovel out thecoarse aggregate and put it where there is plenty of mortar. Then use the tool on it. Don't leave coarse aggregate separated.

When pouring concrete on a slope, always work from the bottom at the beginning. This way the weight of the freshly poured concrete and vibration will lead to effective removal of air bubbles. Conversely, if the working is done first from above, the mortar will separate and eventually slide to the bottom.

MAINTENANCE

Always be sure that the tool is switched off before attempting to perform inspection or maintenance.

KEEP TOOL CLEAN

IMMEDIATELY AFTER USE:

Rinse off all wet concrete from the shaft and vibrator unit before it dries.

WARNING: Double check to ensure that the machine is unplugged before using water!

If the replacement of the power supply cord is necessary, this has to be done by the manufacturer or their agent in order to avoid a safety hazard.

WARNING: All repairs must be entrusted to an authorized service center. Incorrectly performed repairs could lead to injury or death.

WIRING

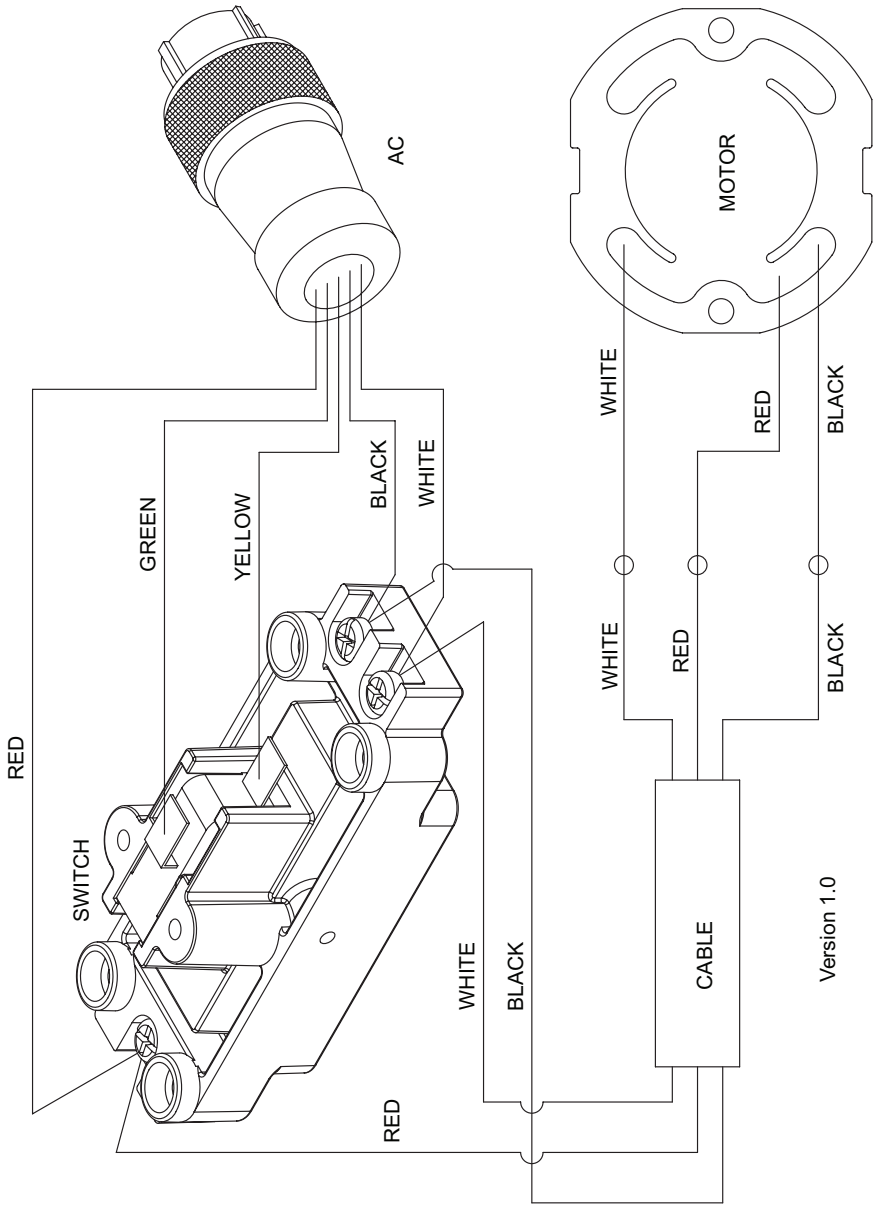
AC
MOTOR
RED
GREEN
YELLOW
BLACK
WHITE
SWITCH
WHITE
BLACK
RED
WHITE
RED
BLACK
WHITE
RED
BLACK
CABLE
Version 1.0

EXPLODED VIEW

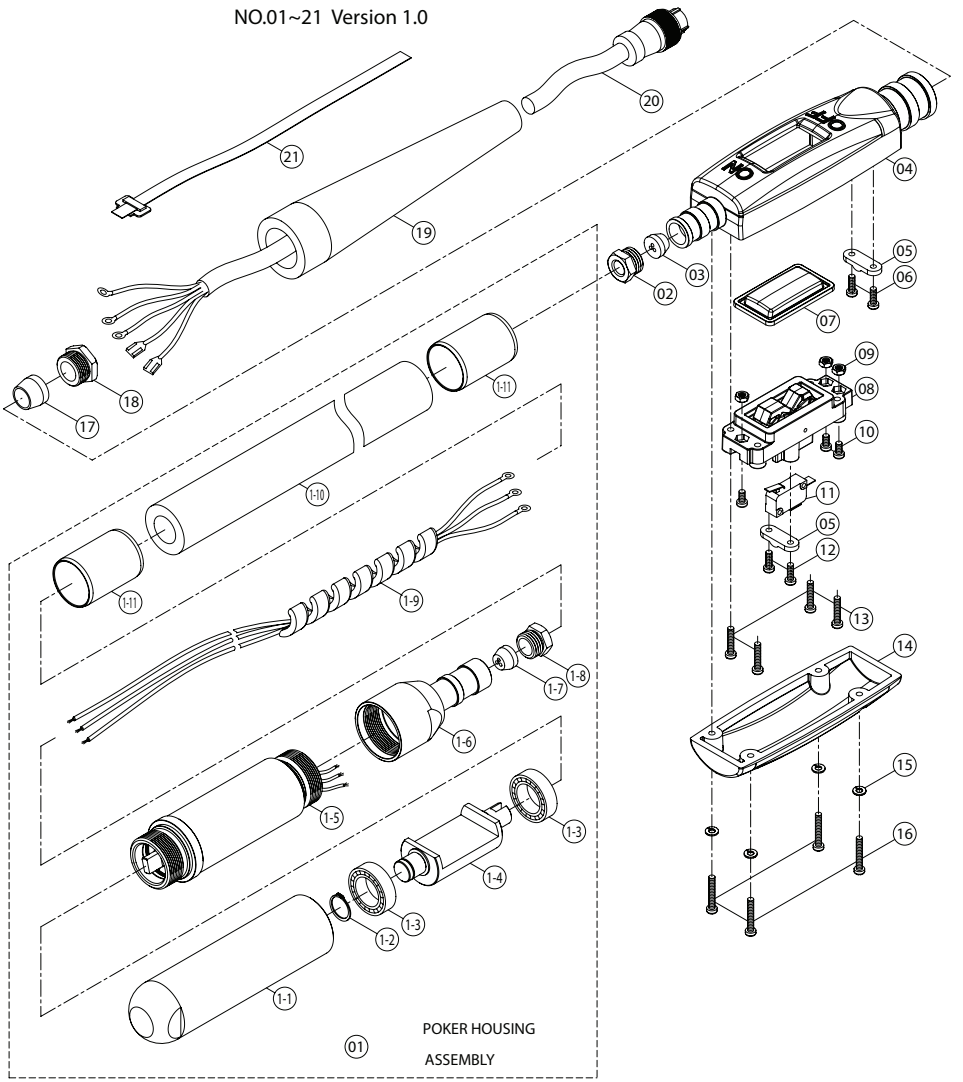

PARTS LIST

NO.	Parts Name	Q'TY
1	POKER HEAD ASSEMBLY Ø30x6M	1
1-1	POKER HOUSING	1
1-2	EXTERNAL CIRCLIP S-15	1
1-3	BALL BEARING 6202	2
1-4	SPINDLE Ø35-95MM	1
1-5	MOTOR UNIT	1
1-6	MOTOR END CASTING	1
1-7	CORD ARMOR	1
1-8	CLAMPING KNOB	1
1-9	WIRE LEADS	1
1-10	HOSE Ø30xØ20x6M	1
1-11	CV CLAMP Ø32xØ35x50	2
2	CLAMPING KNOB	1
3	CORD ARMOR	1
4	SWITCH HOUSING	1
5	CABLE CLIP	2
6	PANHEAD MACHIME SCREW M4x16	2
7	SWITCH BOOT	1
8	SWITCH BODY	1
9	HEX NUT M4	3
10	PANHEAD MACHINE SCREW M4x12	3
11	LIMIT SWITCH 110V&220V	1
12	PANHEAD TAPPING SCREW M4x12	2
13	PANHEAD MACHINE SCREW M4x20	4
14	SWITCH HOUSING COVER	1
15	SPRING WASHER M4	4
16	SOCKET CAP SCREW M4x16	4
17	CORD ARMOR	1
18	CLAMPING KNOB	1
19	CORD ARMOR	1
20	POWER SUPPLY CABLE	1
21	HOSE CLAMP	1